REV.	DCN. NO.	DESCRIPTION	ISSUED
X0.1	RFQ-1508190001 DCN-XXXXXXX	NEW RELEASE	2015/08/10 Simon Wen

PRELIMINARY
PART IN DESIGN

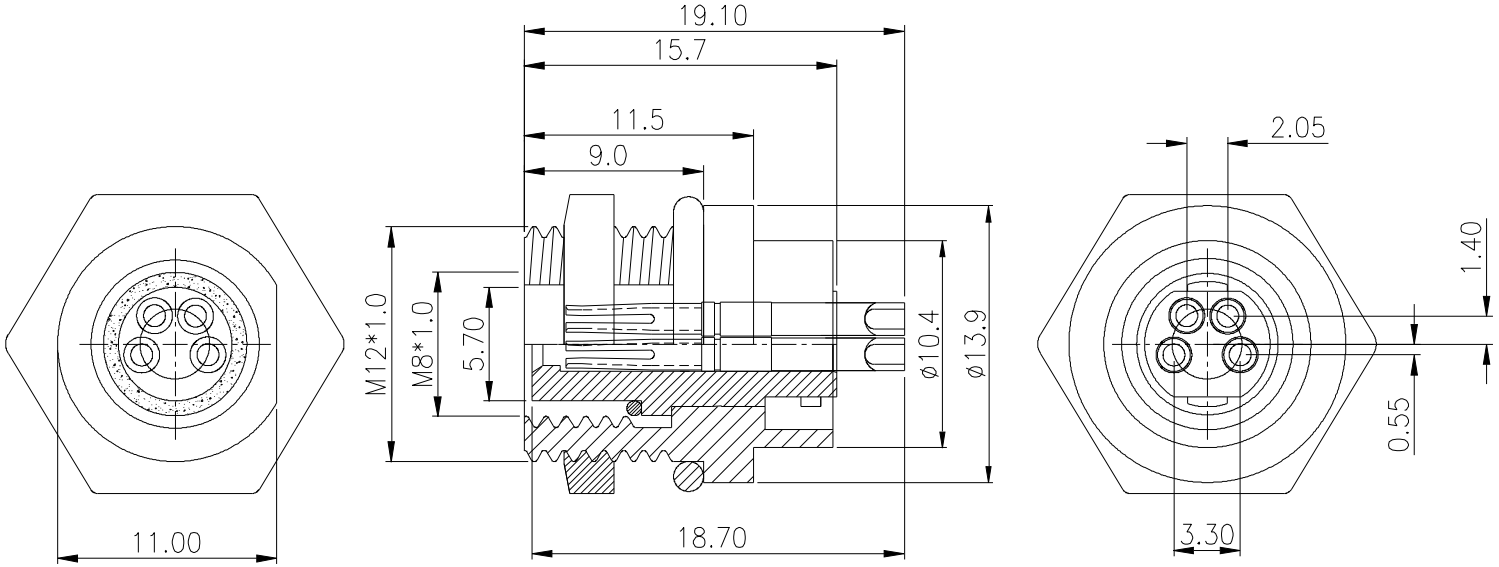

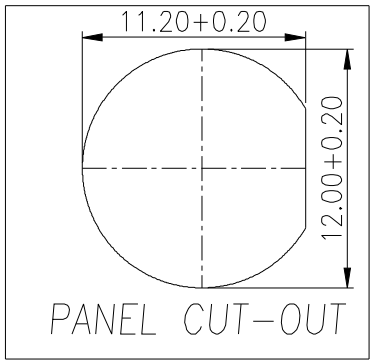

NOTE:

1. MATERIAL :
   - 1-1. HOUSING : PBT UL94V-0 ; COLOR : BLACK
   - 1-2. CONTACT : PHOSPHOR BRONZE
   - 1-3. SHELL : BRASS.
   - 1-4. NUT : BRASS
   - 1-3. O-RING : NBR ; COLOR : BLACK
2. FINISH :
   - 2-1. CONTACT :10 MICRO INCHES MIN. GOLD PLATING OVER NICKEL
   - 2-2. SHELL : NICKEL PLATED.
   - 2-2. NUT : NICKEL PLATED.
3. ELECTRICAL SPECIFICATION :
   - 3-1. Rated current : 5A
   - 3-2. Voltage :125V
   - 3-3. Water proof: IPX7
4. Environmental :
   - 4-1. Operation Temperature : -40°C~85°C

■ LEAD-FREE
□ HALOGEN-FREE

UNLESS OTHERWISE SPECIFIED
DIMENSION ARE IN MILLIMETERs
TOLERANCE ARE :
FRACTION DECIMALs ANGLEs

.X	±0.20	X°.	±2.0°
.XX	±0.15	.X°	±1.0°
		.XX°	±0.5°

3rd ANGLE PROJECTION

SIMULA
Superior Technology Solution Partner

APPROVALS		DATE
DRAWN	Simon Wen	2015/08/10
CHECKED	Owen Zheng	2015/08/10
APPROVED	Payton King	2015/08/10

CONFIDENTIAL

PART NO. HJ2M82-425S-SAA

TITLE M8 4PIN(F)LOCK BOARD TYPE WATERPROOF

SIZE	VERSION	CUSS NO.
A4	X0.1	

SCALE 2.5:1 | UNIT mm | SHEET 1/1

CUSTOMER